EXCLUSIVE

SPIDER LIFTS AT A HIGHER LEVEL FOR 40 YEARS

FALCON 170Z/200Z
(FALCON 56Z/66Z)

FALCON LIFTS

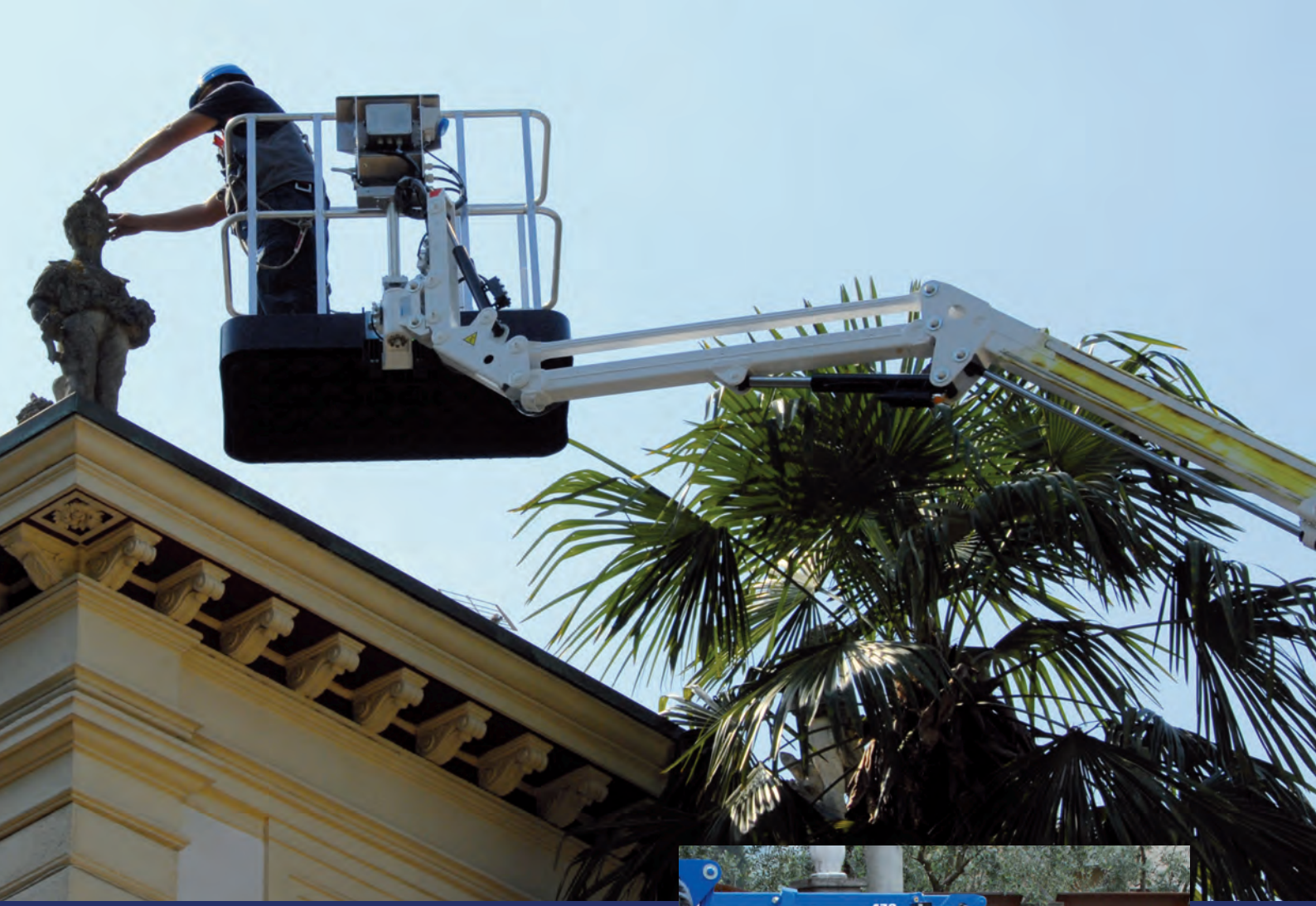

The ultimate compact platform

The Falcon has an extremely versatile boom configuration and machine compactness which make the Falcon models the best choice for maintainers, pruners, installers and hires.

- Facility management
- Atrium access
- Narrow access
- Tree care
- Best quality & safety
- Easy transport & propelling
- Low weight & ground pressure
- Flexible outrigger setting
- Limited setup space
- Power - Bi-energy Hybrid

The Falcon is capable of passing through a door opening a mere 0,8 m (2'7") wide and 2 m (6'6") high. Further details on the Falcon models are mentioned on the following pages.

Falcon 170Z
(Falcon 56Z)

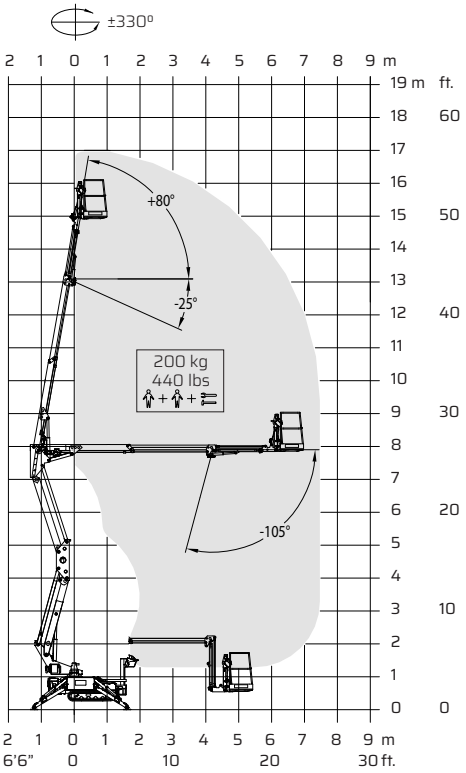

Working height and reach.

Falcon 200Z
(Falcon 66Z)

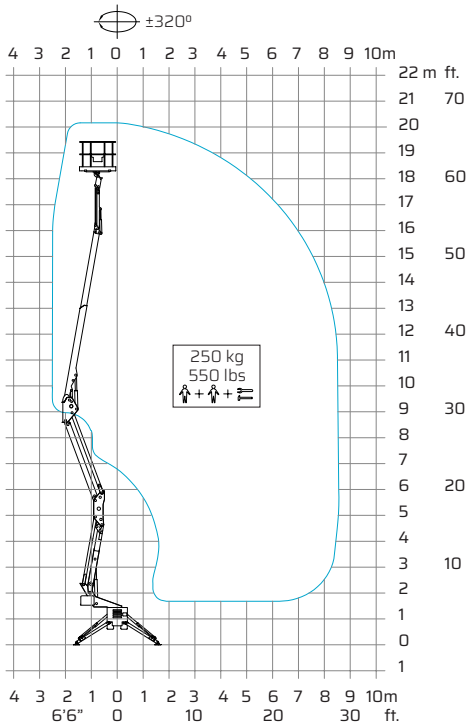

Working height and reach.

Model:	Falcon 170Z	Falcon 56Z
	Metric	**US**
Working height:	17 m	55'9"
Maximum reach:	7,5 m	24'7"
Basket load:	200 kg	440 lbs
Aluminium basket:	130x78x110 cm	4'3"x2'7"x3'7"
Turret rotation:	±330°	±330°
Dimensions (transport position)		
Total height:	2 m	6'6"
Total length:	4,25 m	13'11"
Total width:	0,80 m	2'7"
Gradability:	31%	31%
Weight approx.:	2050 kg*	4510 lbs*

*Depending on optional equipment

Model:	Falcon 200Z	Falcon 66Z
	Metric	**US**
Working height:	20 m	65'7"
Maximum reach:	8,5 m	27'11"
Basket load:	250 kg	550 lbs
Aluminium basket:	140x70x110 cm	4'7"x2'4"x3'7"
Turret rotation:	±320°	±320°
Dimensions (transport position)		
Total height:	2 m	6'6"
Total length:	5,324 m	17'6"
Total width:	0,78 m	2'7"
Gradability:	25%	25%
Weight approx.:	2782 kg*	6120 lbs*

*Depending on optional equipment

FALCON LIFTS A/S

Tolderlundsvej 106
DK-5000 Odense C
Tel: +45 66 13 11 00

falcon@falconlifts.com
falconlifts.com

STANDARD EQUIPMENT:

- Articulated boom (two elements)
- Telescopic boom (main boom + extensions)
- Jib
- ±320°/±330° turret rotation
- Engine start and stop controls from basket
- Basket with aluminium guardrails
- Basket rotation (Falcon 200Z/Falcon 66Z)
- Automatic basket levelling
- Basket load sensing device
- 4 hydraulic outriggers
- Power supply in basket
- Gradability approximately 25°/31°
- Drive speed max 1,5 Km/h (0,9 mph)
- Electro-hydraulic steering from the ground with remote control (wire)
- AC 1,5 kW motor
- Hour meter
- Standard boom colours Grey (RAL 7035) and chassis Blue (RAL5002)
- EN 280:2013 CE Certified
- ANSI Certified

Available with one of the following engines:

- Diesel (Lombardini (Falcon 170Z /Falcon 56Z)
- Diesel (Kubota (Falcon 200Z /Falcon 66Z)
- Petrol (Honda 15 HP)

Or Lithium version

- Lithium batteries 48V 100 Ah (Falcon 170Z Lithium / Falcon 66Z Lithium)

OPTIONS:

- Dust Cover for Storage
- Special colour
- Basket rotation (Falcon 170Z/Falcon 56Z)
- Anti entrapment device
- Non-marking crawlers
- Air/water in basket